Brand :	KOHLER
Name :	Kumin shower column (8" ohs)
Item Code :	K99474T-C4-CP
Designer :	
Color / Finish:	Chrome
Dimensions :	(See data drawing below)

Product info:

- 3-way shower column
- With Katalyst
- Air induction technology

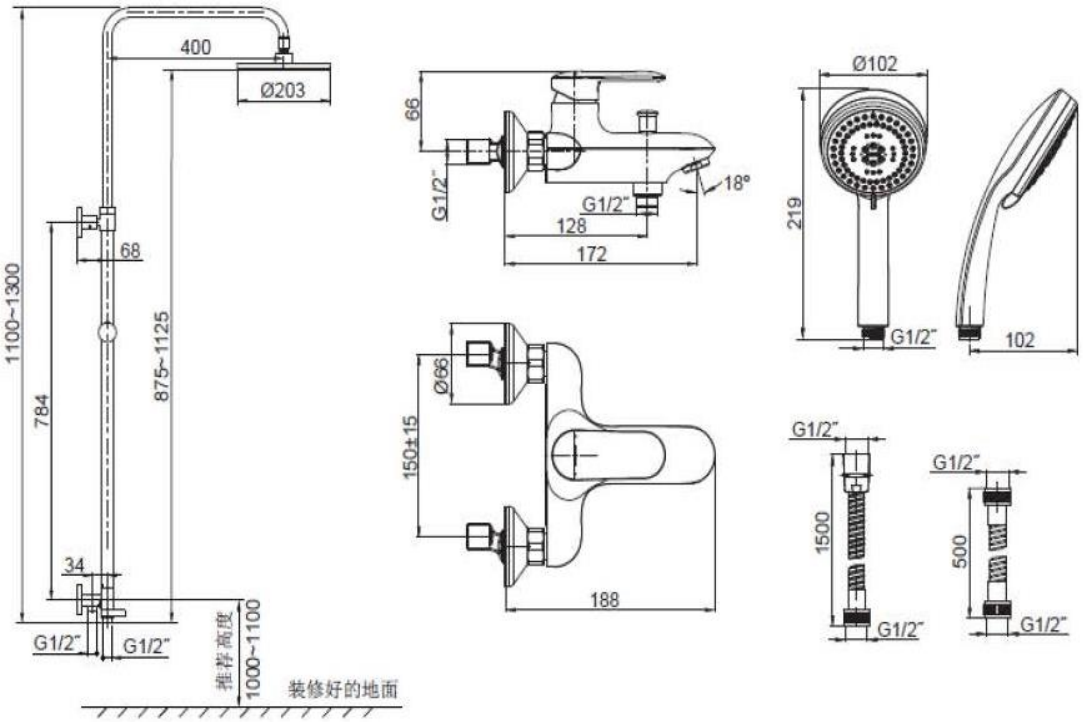

Flushing of pipe must be done before fittings are installed. Failure to do so voids the warranty.
Follow cleaning instructions and avoid using any harmful chemicals.
All information is for reference only. Installation shall always be based on the specs provided with actual delivered items.
For more info, visit **www.sanitecph.com**