SANITEC

KOHLER®

Brand :	KOHLER
Name :	MEMOIRS STATELY 1-Piece elongated toilet with quiet close seat
Item Code :	K3453T-AT-0
Designer :	
Color / Finish:	White
Dimensions :	705 x 464 x 721 mm

Product info:

- 1pc Elongated Toilet
- With S&C 4.8 lpf
- Side trip lever
- Avantis seat and cover

- 54.10600 Flexible hose ½"x½"x14“
- C408681 Angle valve ½"x½
- B9082GASVI Floor flange

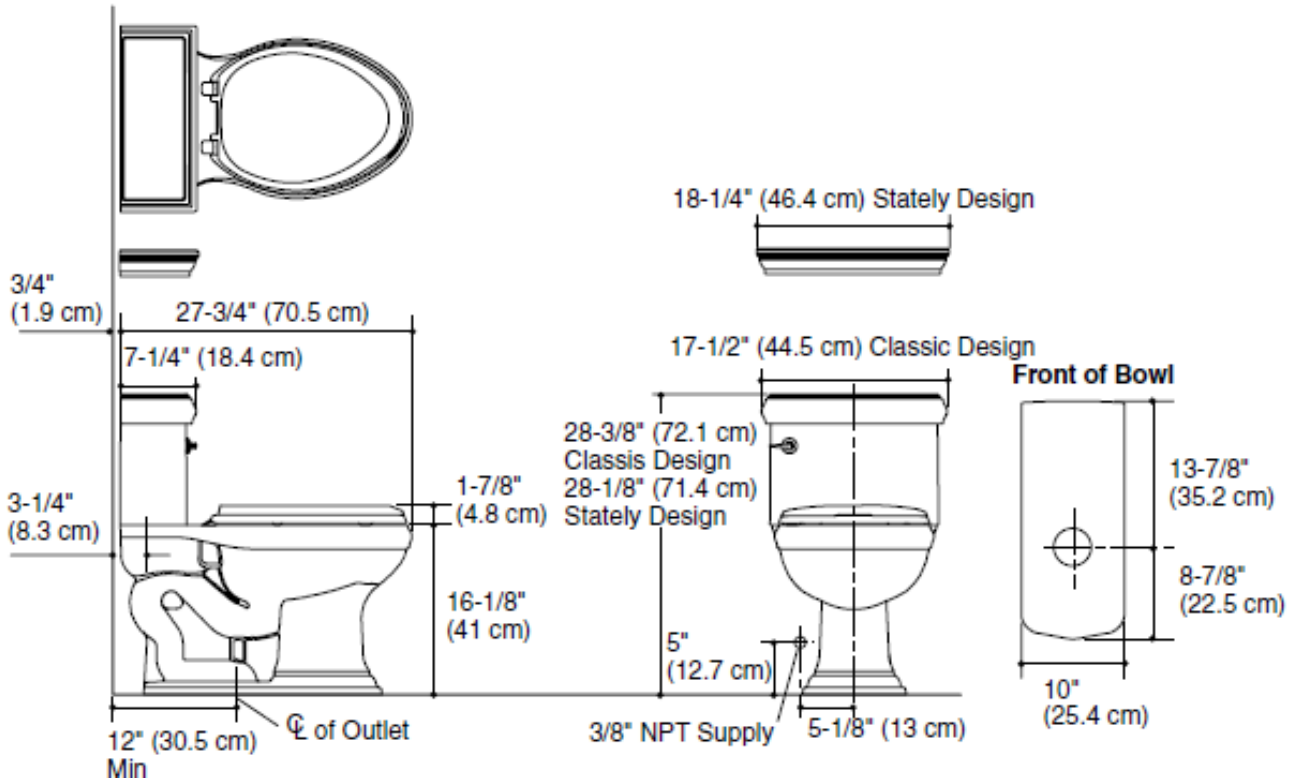

Flushing of pipe must be done before fittings are installed. Failure to do so voids the warranty.
Follow cleaning instructions and avoid using any harmful chemicals.
All information is for reference only. Installation shall always be based on the specs provided with actual delivered items.
For more info, visit **www.sanitecph.com**