| | |
|---|---|
| Brand : | KOHLER |
| Name : | Leap One-piece elongated smart toilet, dual-flush |
| Item Code : | K-28529K-0 |
| Designer : | |
| Color / Finish: | White |
| Dimensions : | 369 x 681 x 523 mm |

Product info:

- Slim, contemporary one-piece smart toilet with integrated personal cleansing
- Elongated bowl offers added room and comfort
- Dual-flush offers a choice of 1.0 or 1.28 gpf (3.4 or 4.8 lpf)
- Easy installation system provides a simple solution for skirted toilets
- Self-cleaning function uses UV light to automatically clean the wand surfaces
- Standard 12" (305 mm) rough-in
- Automatic flushing after every use; flush can also be controlled by the remote control or backup button
- Quiet-Close™ elongated lid and seat prevents slamming

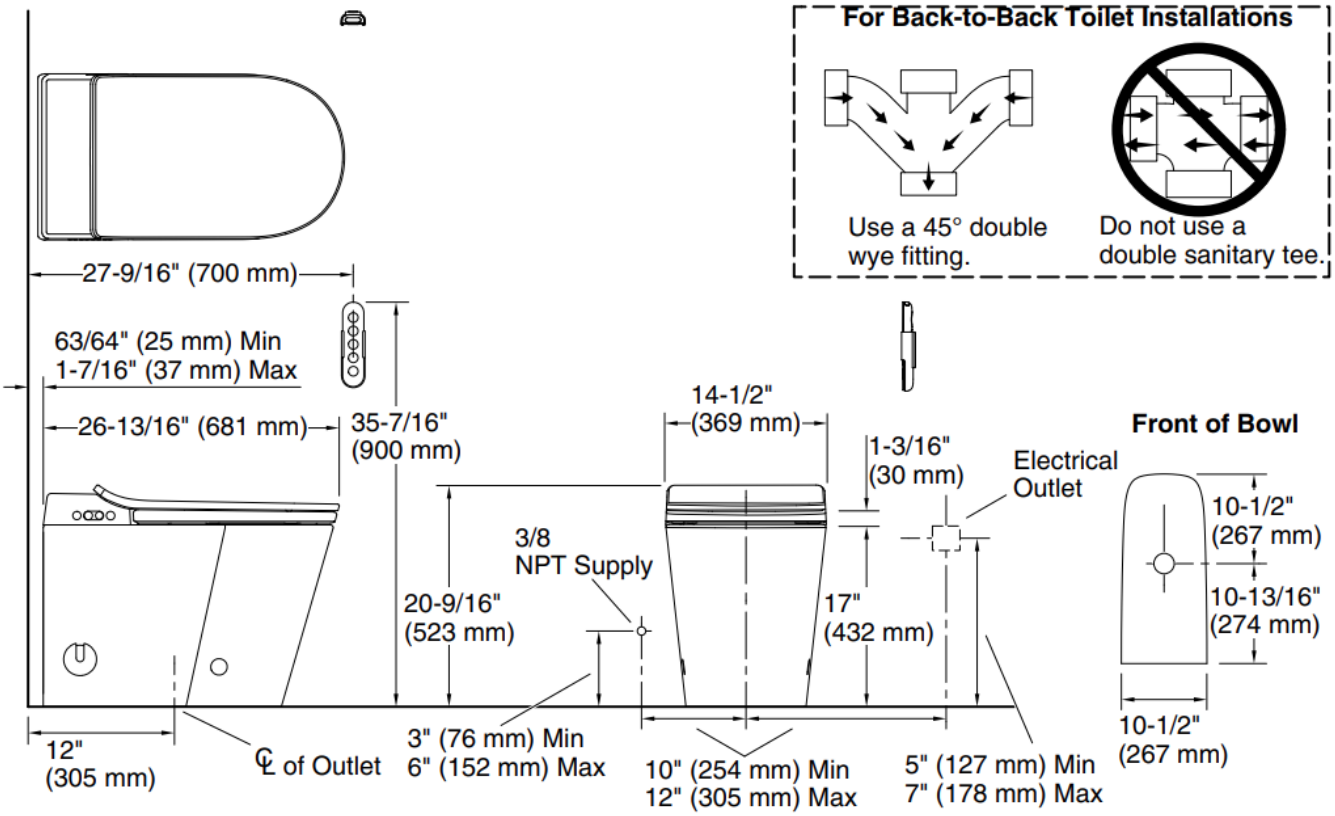


Flushing of pipe must be done before fittings are installed. Failure to do so voids the warranty.
Follow cleaning instructions and avoid using any harmful chemicals.
All information is for reference only. Installation shall always be based on the specs provided with actual delivered items.
For more info, visit **www.sanitecph.com**