Brand :	CAE, China
Name :	TOLEDO Wall mounted shower pipe with hand & overhead shower
Item Code :	88.2720C
Designer:	
Color / Finish:	Chrome Plated
Dimensions :	1310 mm Height

Product info:

- Single lever Shower pipe set
- With overhead and hand shower set
- Normal spray
- Flow rate: 15.7 lpm at 3 bars (45 psi)
- Flow pressure: 0.3Mpa

Add-ons:

- 1x basin waste trap 1¼"

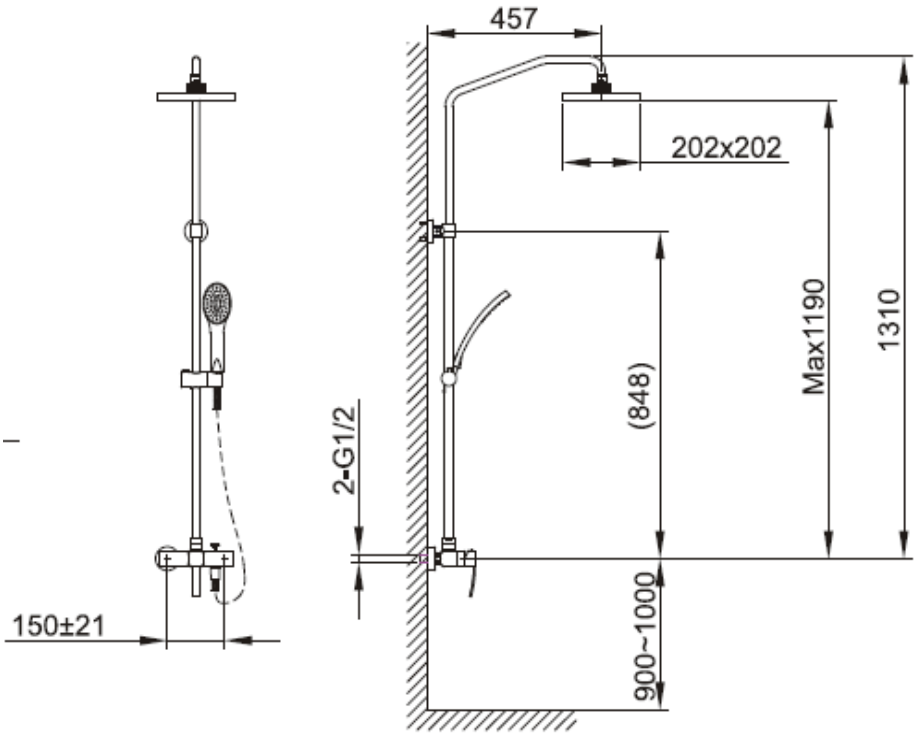

Flushing of pipe must be done before fittings are installed. Failure to do so voids the warranty.
Follow cleaning instructions and avoid using any harmful chemicals.
All information is for reference only. Installation shall always be based on the specs provided with actual delivered items.
For more info, visit **www.sanitecph.com**