Brand :	CAE, China
Name :	AMANDA VICTORIA Basin pillar tapcold water only
Item Code :	07.1015C
Designer:	
Color / Finish:	Chrome
Dimensions :	148 mm height 97 mm spout projection

Product info:

- Basin pillar tap, Cross handle
- Without pop-up
- Normal Spray
- Flow rate: 10.7 lpm at 3 bars (45 psi)
- Flow pressure: 0.3 Mpa

Add-ons:

- 1x angle valve ½"x½" (no nut)
- 1x basin waste strainer or pop-up
- 1x basin waste trap 1¼”

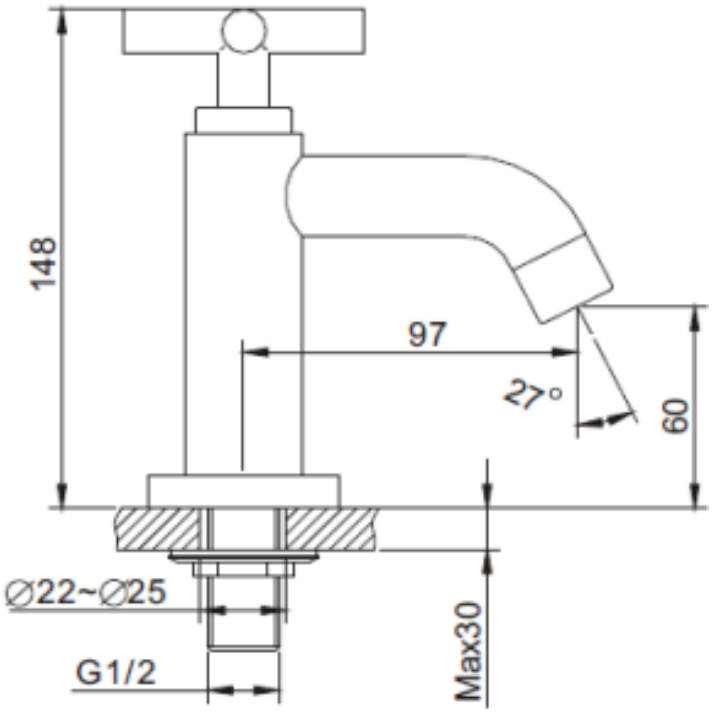

Flushing of pipe must be done before fittings are installed. Failure to do so voids the warranty.
Follow cleaning instructions and avoid using any harmful chemicals.
All information is for reference only. Installation shall always be based on the specs provided with actual delivered items.
For more info, visit **www.sanitecph.com**