236 E. Rodriguez Senior Avenus, Barangay Don Manuel, Quezon City, Metro Manila, Philippines 1113.
Tel: (+632) 740 7509 E-mail: info@kuysen.com

SANITEC
IMPORT VENTURES, INC.

SPECIFICATION SHEET - fittings

BRAND:	VRH
ORIGIN:	Thailand
SERIES:	**SMOOTH**
PRODUCT DESCRIPTION:	Basin tap for cold or pre-mixed water
MODEL No.	B2000D1
FINISH/COLOUR:	304 Stainless steel
DIMENSIONS:	182mm height, 155m length
OPTIONAL MATCHING PARTS:	1x angle valve ½"x½" (no nuts) 1x flexible supply hose ½"x½" x?cm 1x basin waste strainer or pop-up 1x basin waste trap

Product Photo:

Technical Informations:

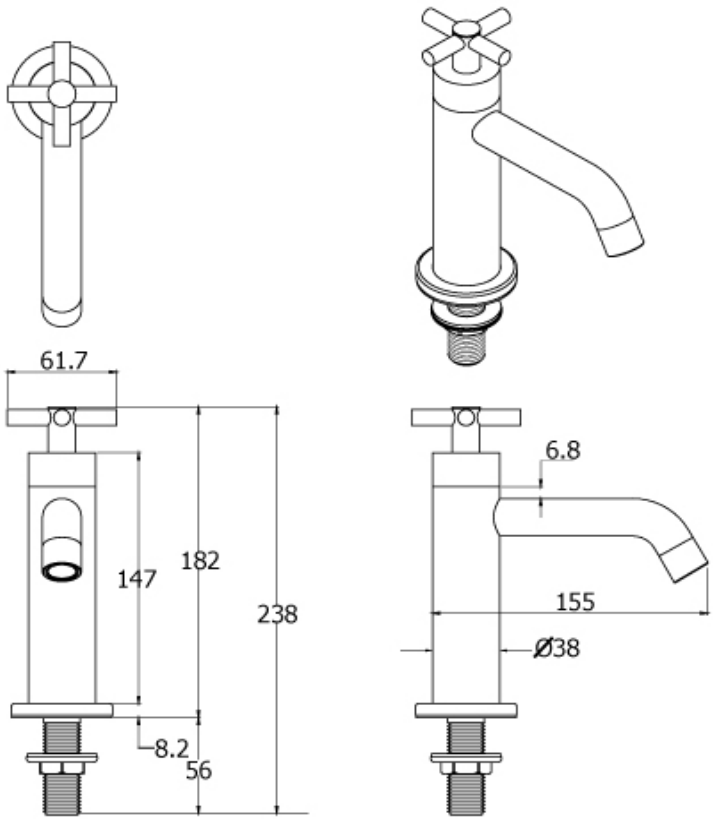

REMINDER:	Pipe flushing must be done before faucets are installed. Failure to do so voids the warranty.
	Do not use cleaners containing abrasive cleansers, ammonia, bleach, acids, waxes, alcohol, solvents or other products not recommended for chrome.
	All information is for reference only, installation shall always be based on the actual product delivered.